New Members of XMC4000

One Microcontroller Platform – Countless Solutions

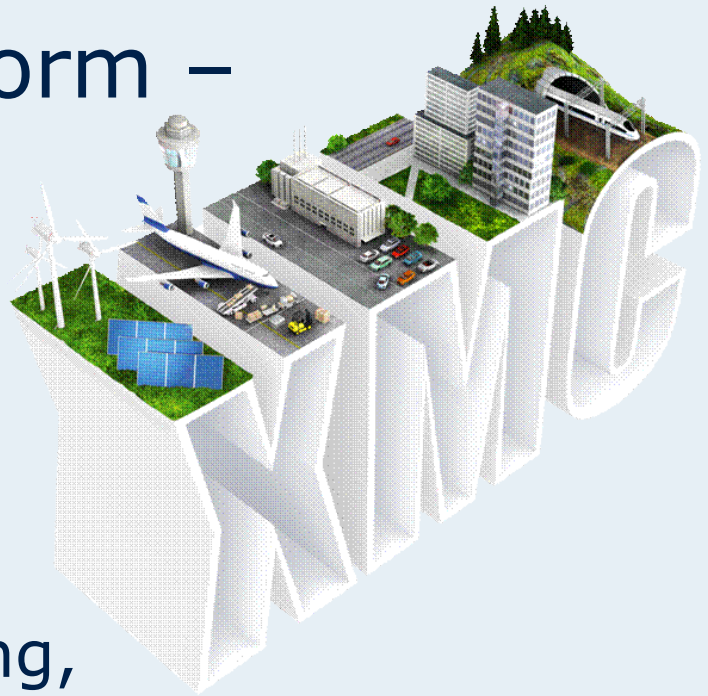

SPS IPC Drives 2012

Gabriela Born, Manager, Marketing,
Industrial and Multimarket Microcontrollers

infineon

We Focus on Three Areas with Highly Attractive Future Perspectives

Energy Efficiency | **Mobility** | **Security**







Automotive

Industrial Power Control

Power Management & Multimarket

Chip Card & Security

Copyright © Infineon Technologies AG 2012. All rights reserved.

For industrial applications Infineon offers a 32-bit microcontroller generation based on open-standard ARM® Cortex™-M4 core

The XMC4000 Microcontroller Family

Fusion of Infineon's long-term microcontroller expertise with all benefits of an open core architecture dedicated to industrial applications

Copyright © Infineon Technologies AG 2012. All rights reserved.

Tackling the Challenges of Industrial Applications

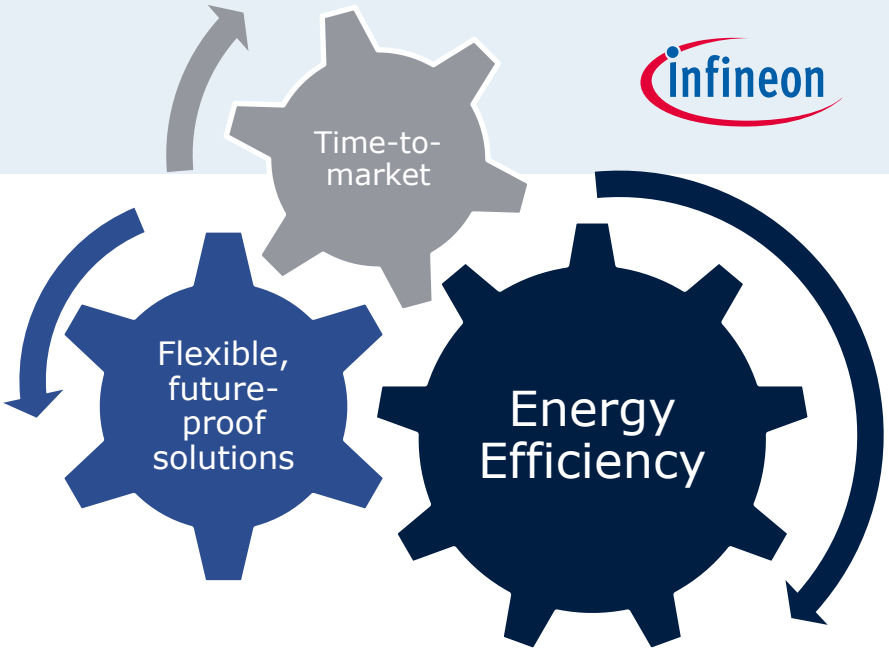

Our quest: Enable our customers to master their challenges

Energy efficiency	■ Performance of ARM® Cortex™-M4 with DSP functionality and FP unit ■ Real-time optimized system with autonomous peripherals and fast eFlash ■ Most advanced PWM, timers and 12-bit ADC for efficient motor control ■ High-resolution PWM unit for power conversion, solar inverters, etc. ■ ΔΣ-Demodulator for motor control
Flexibility, future proof	■ True family concept with roadmap extensions to the high-end and low-end ■ Large degree of programmability, support of advanced communication stacks ■ Long-term availability
Short time-to-market	■ Well-known, standard core securing availability of standard tools and experienced software developers ■ Software infrastructure DAVE™ 3 making software development as easy as possible ■ Flexibility to decouple hardware from software design

Copyright © Infineon Technologies AG 2012. All rights reserved.

The Microcontroller Family XMC4000

- Dedicated to industrial applications
- Bridging the performance gap between C166 and TriCore™

MIPS

>300



TriCore™ 32-bit
AUDO MAX, AURIX™

200



XMC4000
XMC4700, XMC4500,
XMC4400, XMC4200,
XMC4100

120



C166/XE166 16-bit
C166, XC166,
XC2000, XE166

10

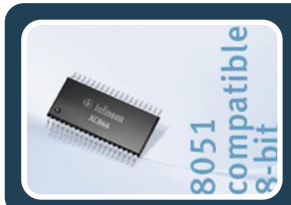

8051 compatible
8-bit
C5xx, XC8xx

XMC4000

- Enables higher clock frequencies
- Enables support of advanced communication stacks such as Ethernet, USB
- Provides all benefits of industry-standard ARM® Cortex™ core

Copyright © Infineon Technologies AG 2012. All rights reserved.

ARM® Cortex™-M4: Combination of real-time control and signal processing capabilities

Cortex-M4

Addressing "32-bit/DSC" applications

DSC = MCU plus DSP

Accelerated SIMD, FP and DSP

DSP
- Harvard architecture
- Single Cycle MAC
- Floating Point
- Barrel shifter

MCU
- Ease of use
- C Programming
- Interrupt handling
- Ultra low power



Copyright © Infineon Technologies AG 2012. All rights reserved.

ARM® Cortex™-M4 DSP Performance compared to Cortex™-M3

- Cortex-M4 SIMD + FPU
  - Fix point: ~2x faster
  - Floating point: ~10x faster

CMSIS COMPLIANT
ARM® Cortex™ Microcontroller Software Interface Standard

CMSIS DSP Library Benchmark: Cortex-M3 vs. Cortex-M4

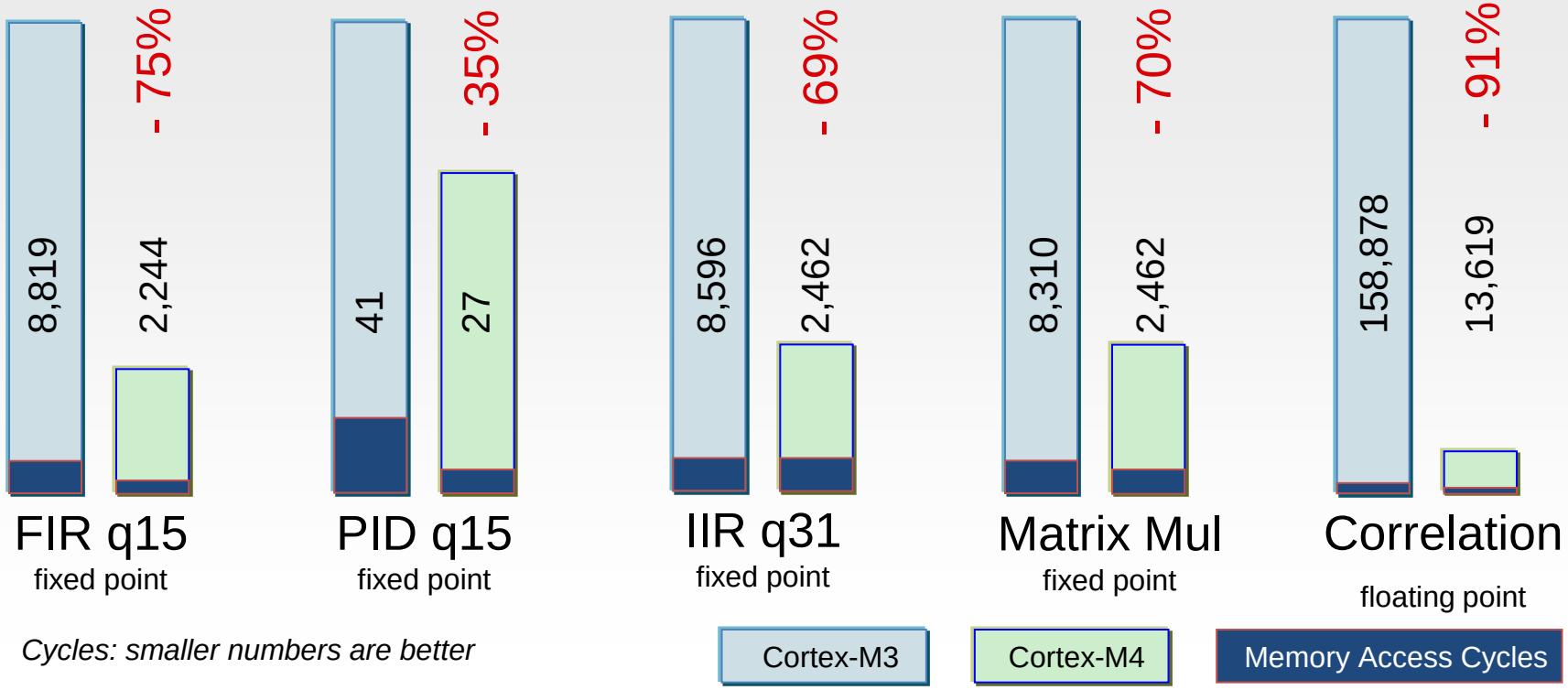

Copyright © Infineon Technologies AG 2012. All rights reserved.

XMC Target Applications



Renewable Energy

- Solar plants
- Windmills



Logistics

- Conveyor belts
- Lifting ramps
- Lift trucks
- Barcode readers
- Warehouse management systems



Factory Automation

- Machine control
- Robotics
- Sense & Control



Building Automation

- Lighting
- Blind control
- Elevators
- Door/gate control
- Access control
- HVAC systems



Transpor-tation

- Agricultural vehicle
- Construction vehicle
- Municipal vehicle
- Trains/mass transportation

Motor Control
Position detection
UPS
Light Networks
IO devices
Solar inverters
SMPS
Power conversion
HMI
PLC
Sense & Control

Copyright © Infineon Technologies AG 2012. All rights reserved.

Technical Highlights XMC4000 Family

- Most advanced peripheral set in the industry
  - Highly flexible and programmable to specific application requirements
  - Highly autonomous, off-loading the CPU, saving power(e.g. POSIF)
  - SW-friendly with repetitive HW structures
  - Unique peripherals, lowering overall system BOM (e.g. Delta-sigma demodulator, HRPWM)
- High-integrity embedded Flash with error correction and very fast access time (22ns)
- Extended temperature range from -40 °C up to 125 °C
- DAVE™ 3 component-based programming, auto-code generator

Copyright © Infineon Technologies AG 2012. All rights reserved.

XMC4000 is benchmark for Actuator Control & Analog, Industrial Communication and Embedded Safety

ARM® Cortex™-M4 & Floating Point Unit

DEBUG

System Timer

Real Time Clock

DMA

Memories

Communication

Ethernet

USB

SD/MMC card I/F

External Memory I/F

CAN

USIC (Serial communication)

Timer & Actuator Control

CCU4

CCU8

High Resolution PWM

Position Interface

ΔΣ Demodulator

Analog & Mixed Signal

ADC

DAC

HMI

Capacitive Touch

LED Matrix

Ports

System Integrity

Data protection through ECC/Parity

CRC & Random Pattern generation

Infineon innovation

Infineon state-of-the-art

Standard

Copyright © Infineon Technologies AG 2012. All rights reserved.

The XMC4000 HRPWM enables stable SMPS output voltage at several hundred kHz w/o additional costs

Without HRPWM: Ripple on output voltage*

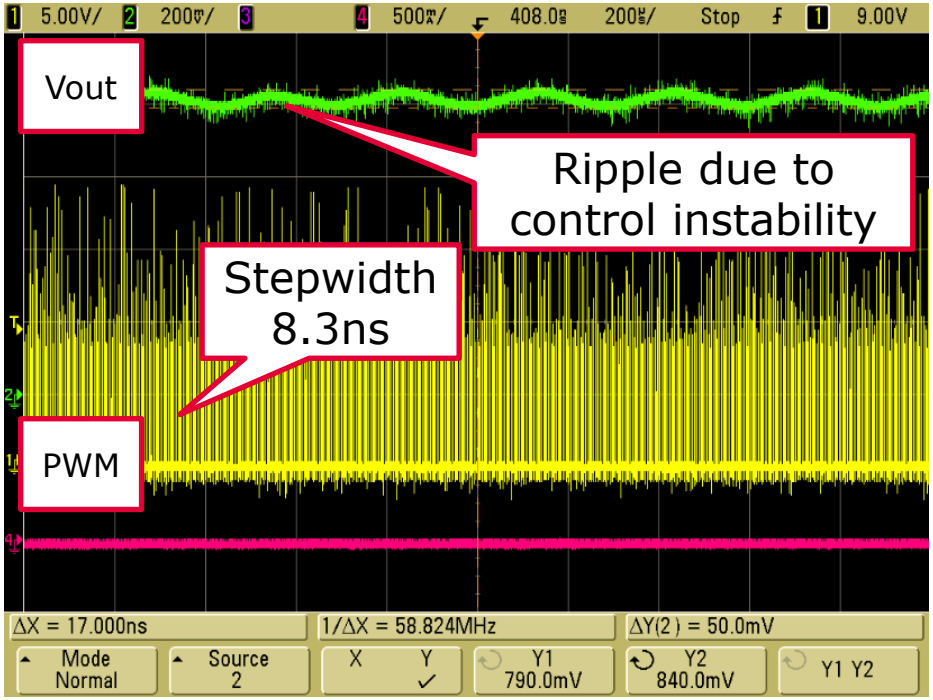

* Measured on 280KHz buck converter w/o HRPWM

With HRPWM: Stable output voltage*

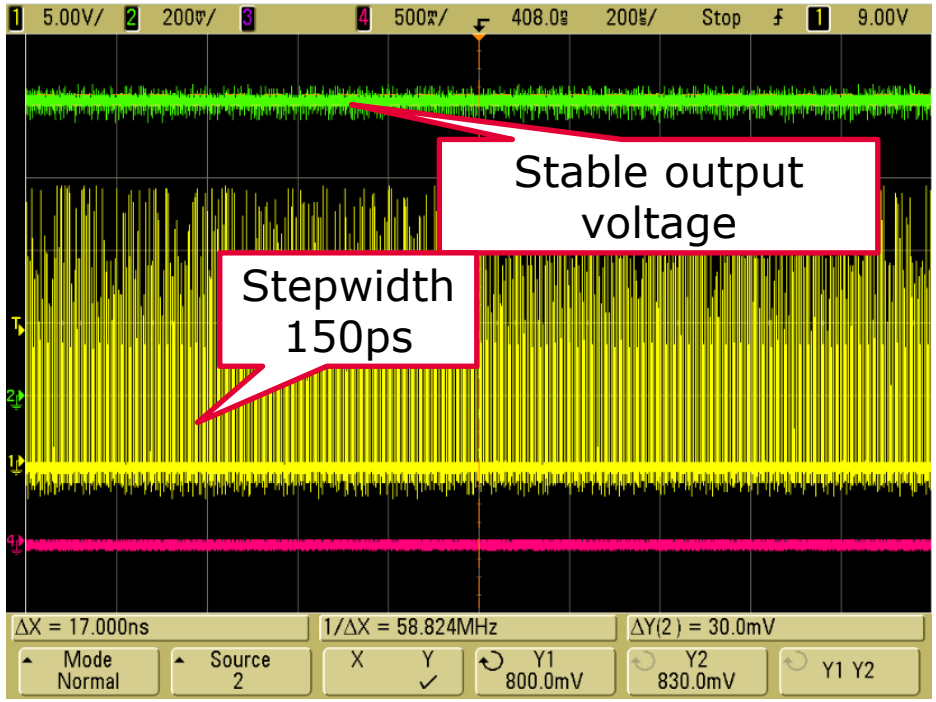

* Measured on 280KHz buck converter with HRPWM

SMPS output voltage requirements:

a) Precise and stable output voltage at high switching frequencies beyond 200 KHz

b) Precision and stability at digital power supply must be price competitive

Smart solution by XMC4000:

a) HRPWM with 150ps step width

b) Realization w/o increase of CPU frequency (equals 6.67 GHz)

Copyright © Infineon Technologies AG 2012. All rights reserved.

Example for highly configurable and SW friendly Peripherals: CCU4 and CCU8 Timers

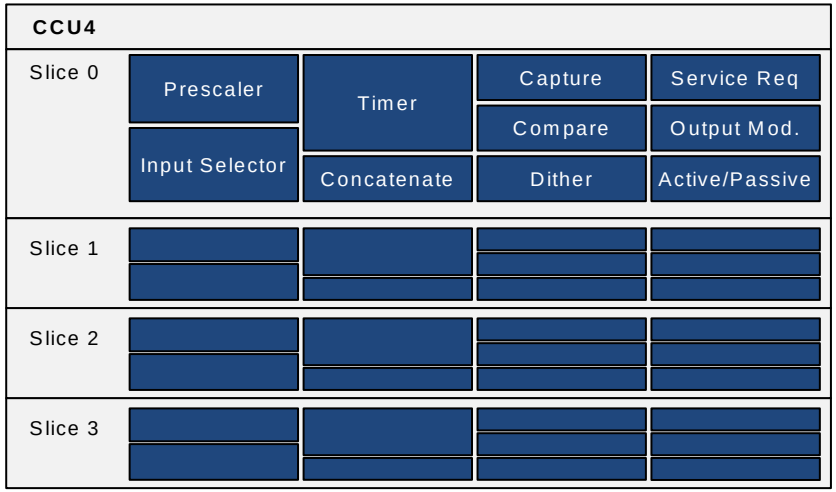

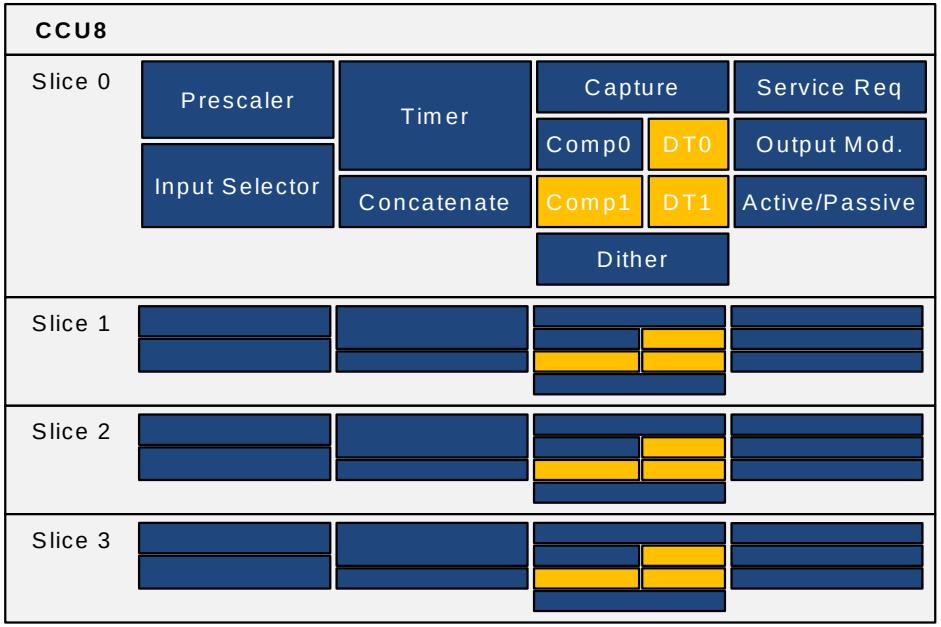

Highly configurable

- Prescaler: all CCU4 slices are supplied by their individual clocks, programmable in prescaler
- Input Selector: 3 external/internal signals are selected and noise filtered; Used as edge or level sensitive signal to control the timer/counter, set capture triggers, set the PWM output
- Concatination: 4 timer slices of a CCU4 module can be concatenated to increase resolution
- Capture: Each CCU4 Slice can capture external and internal signals on rising/falling or both edges
- Compare & Dither for PWM generation: symmetric, asymmetric, edge aligned

SW friendly with repetitive HW

- Each CCU8 timer slice is based on CCU4 slice plus additional Compare and different dead times for rising/falling edge

Copyright © Infineon Technologies AG 2012. All rights reserved.

Example for BOM saving through Integrated ΔΣ Demodulator

Conventional approach

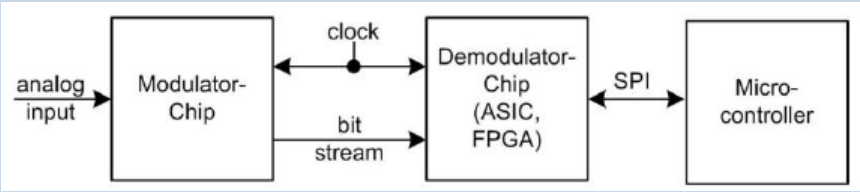

Application example

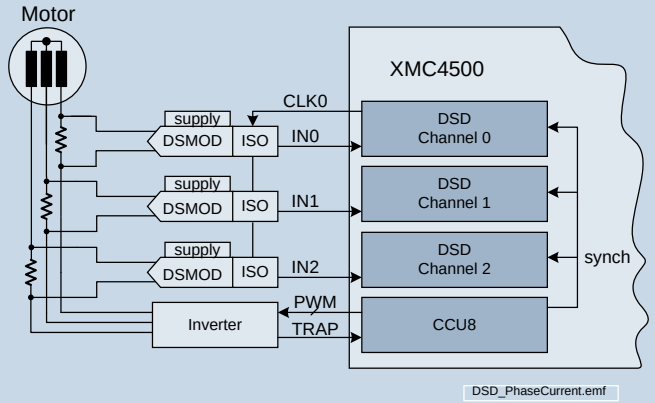

New approach: saving 1 IC

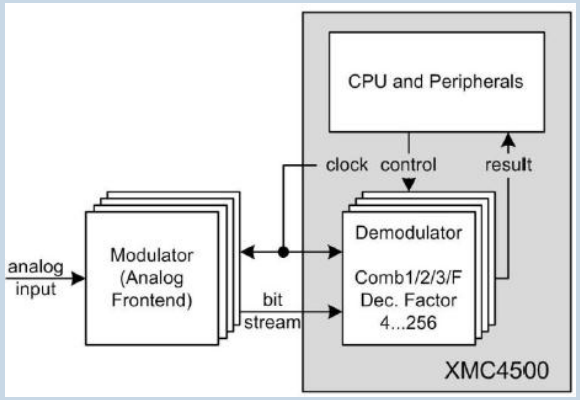

Features of new approach

- Elimination of dedicated ΔΣ Demodulator chip
- External ΔΣ modulator with galvanic isolation allows direct shunt measurement at "hot phase"
- Integrated solution: Common time base for PWM generation and bit stream processing for highly efficient motor control

Copyright © Infineon Technologies AG 2012. All rights reserved.

Example for Autonomous Peripheral Operation: Boundary Check in ADC Kernel

ADC electrical characteristics	
Resolution	12-Bit, 14-Bit with accumulated results
Accuracy	TUE +/-4LSB
Reference Voltage Range	1.0 – 3.65V
Sample Time	min. 67ns
Conversion Time	min. 483ns @ 12-Bit (lower @ 8-Bit and 10-Bit)

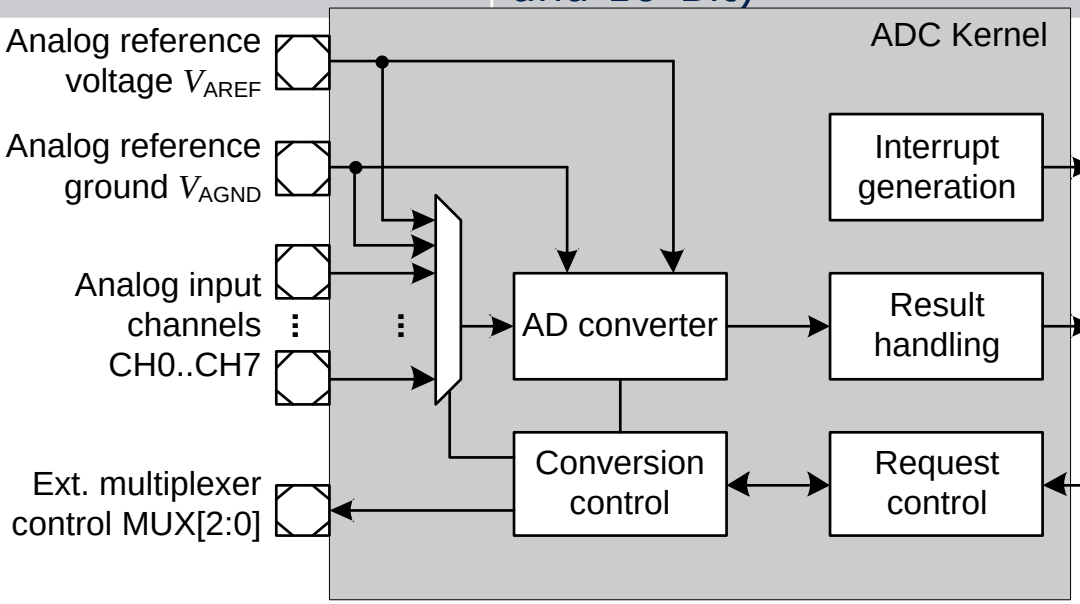

Each channel of an ADC kernel can be individually assigned to the kernel‘s lower and upper boundary or the global boundaries

A service request is generated automatically whenever a conversion result is outside the user defined band

Copyright © Infineon Technologies AG 2012. All rights reserved.

XMC4000 Family Members

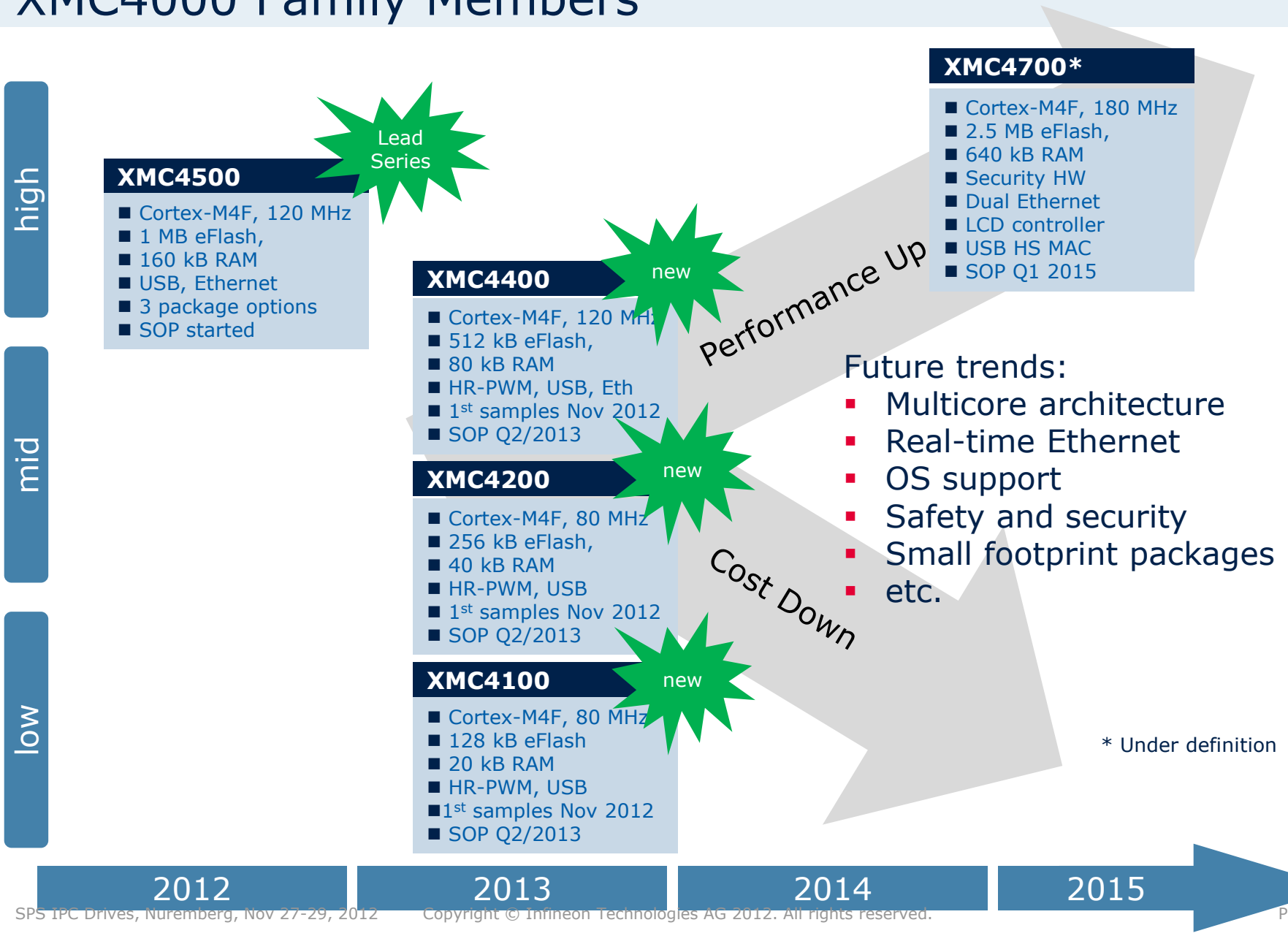

Copyright © Infineon Technologies AG 2012. All rights reserved.

XMC4000 New Derivatives – Key Deviations

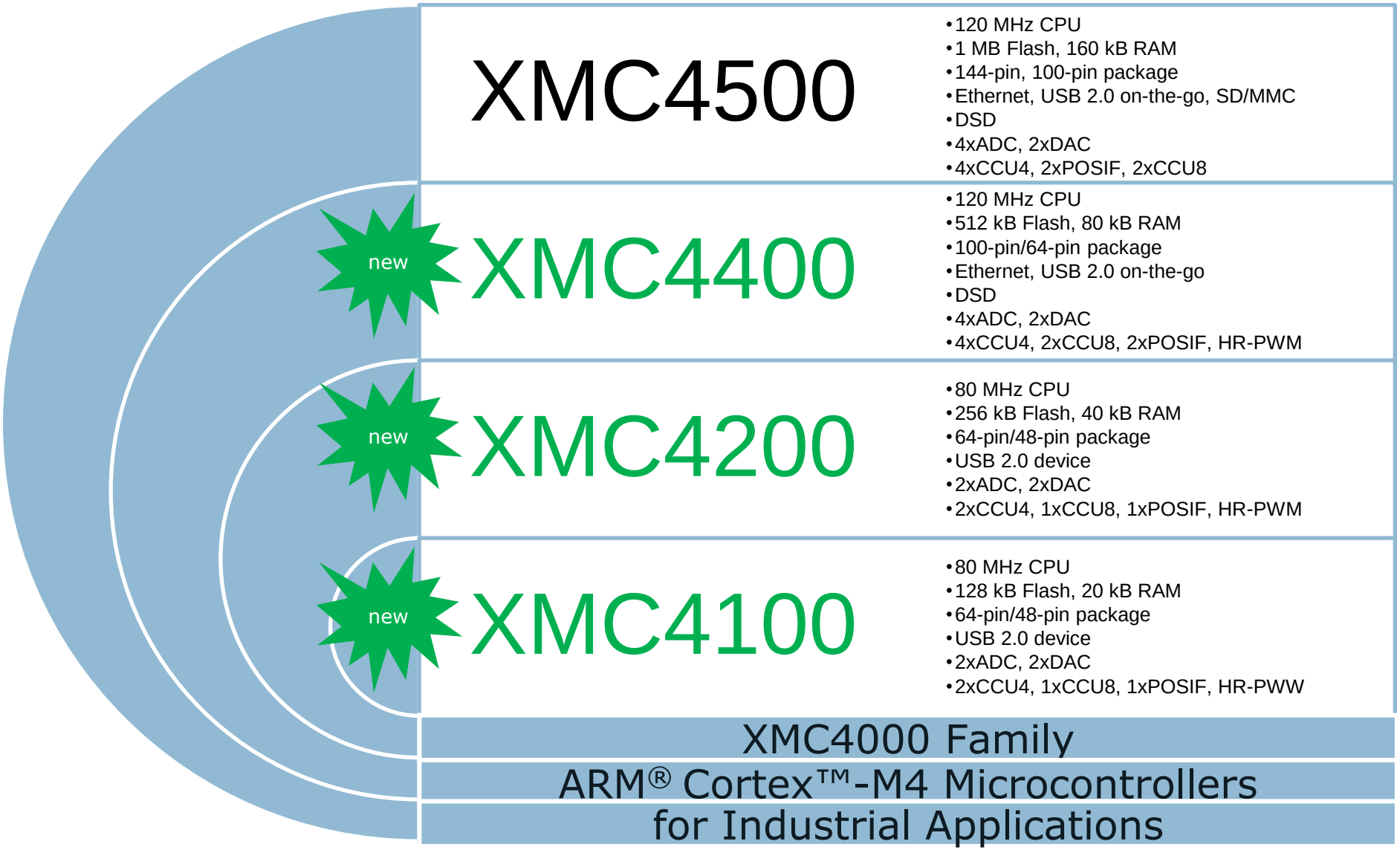

Copyright © Infineon Technologies AG 2012. All rights reserved.

XMC4000 Key Family Members
Strong Portfolio, Maximized Scalability

Low-end → High-end

* Under definition

		XMC4100	XMC4200	XMC4400	XMC4500	XMC4700*
System Performance	Core	ARM® Cortex™-M4				
	CPU frequency (at 125 °C)	80 MHz	80 MHz	120 MHz	120 MHz	180 MHz
	Co-proc	Floating Point Unit				
	Flash size	128 kB	256 kB	512 kB	1 MB	2.5 MB
	RAM size	20 kB	40 kB	80 kB	160 kB	512 kB
	Cache	4 kB	4 kB	4 kB	4 kB	6 kB
Timers	POSIF	1x	1x	2x	2x	2x
	CCU4 (4ch)	2x	2x	4x	4x	4x
	CCU8 (4ch)	1x	1x	2x	2x	2x
	High-resolution PWM (150ps) channels	4x	4x	4x		
Signal Pro-cessing	ADC 12-bit	2x	2x	4x	4x	4x
	Delta/Sigma Demodulator			4x	4x	4x
	DAC	2x	2x	2x	2x	2x
Communication	IEEE 1588 Ethernet MAC			1x	1x	2x
	USB	FS DEV	FS DEV	FS OTG	FS OTG	HS OTG
	SDIO/SD/MMC				✓	✓
	Serial channels (UART, SPI, I^2C, I^2S)	4x	4x	4x	6x	6x
	Ext. Memory I/F				✓	✓
	CAN	2x	2x	2x	3x	3x
	Touch Button	✓	✓	✓	✓	✓

Copyright © Infineon Technologies AG 2012. All rights reserved.

XMC4000 Family Concept: Pin-compatible Package to Neighbor Series

CPU Frequency @ 125 °C	Flash	SRAM	VQFN-48 (7x7)	LQFP-64 (12x12) LFBGA-64 (in def.) (5x5)	LQFP-64 (12x12)	LQFP-100 (16x16)	LFBGA-144 (10x10)	LQFP-144 (22x22)	LQFP-176 (26x26) LFBGA-225 (13x13)
180	2.5MB	512kB						XMC4700 (in def.)	XMC4700 (in def.)
120	1MB	160kB					XMC4500	XMC4500	
120	768kB	160kB				XMC4500			
120	512kB	80kB				XMC4400			
80/120	256kB	40/80kB		XMC4200	XMC4400				
80	128kB	20kB		XMC4100					
80	64kB	20kB	XMC4100						

Pin locations on identical package sides

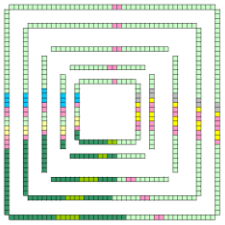



Copyright © Infineon Technologies AG 2012. All rights reserved.

Example for BOM saving through Integrated ΔΣ Demodulator

Conventional approach

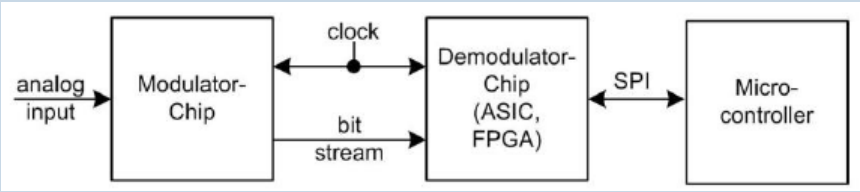

Application example

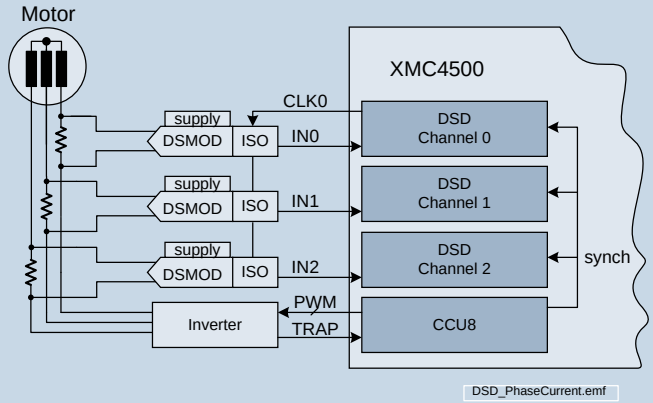

New approach: saving 1 IC

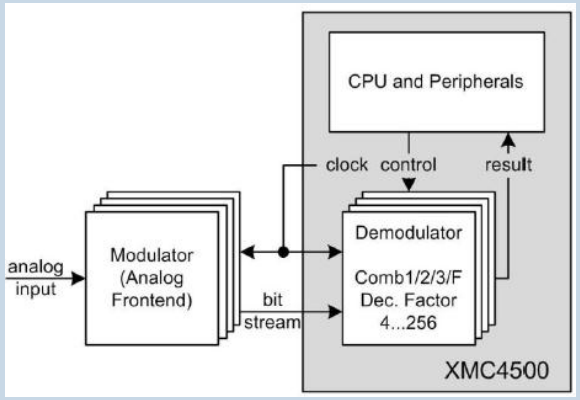

Features of new approach

- Elimination of dedicated ΔΣ Demodulator chip
- External ΔΣ modulator with galvanic isolation allows direct shunt measurement at "hot phase"
- Integrated solution: Common time base for PWM generation and bit stream processing for highly efficient motor control

Copyright © Infineon Technologies AG 2012. All rights reserved.

Example for Autonomous Peripheral Operation: Boundary Check in ADC Kernel

ADC electrical characteristics	
Resolution	12-Bit, 14-Bit with accumulated results
Accuracy	TUE +/-4LSB
Reference Voltage Range	1.0 – 3.65V
Sample Time	min. 67ns
Conversion Time	min. 483ns @ 12Bit (lower @ 8- and10-Bit)

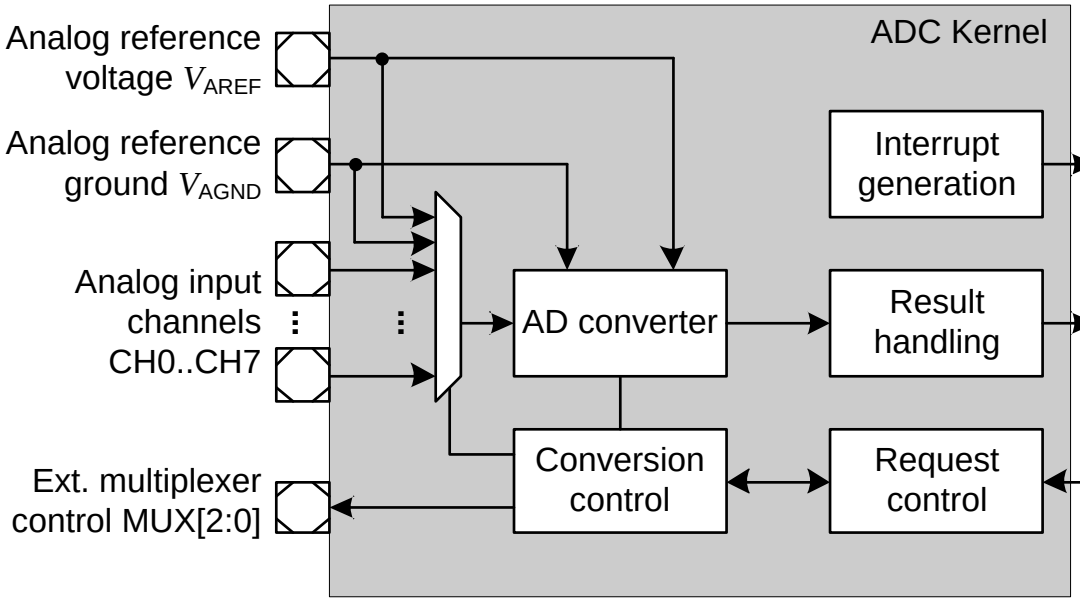

Each channel of an ADC kernel can be individually assigned to the kernel‘s lower and upper boundary or the global boundaries

A service request is generated automatically whenever a conversion result is outside the user defined band

Copyright © Infineon Technologies AG 2012. All rights reserved.

Modular Development Kit to speed up Evaluation and Development

HMI-Satellite 2

- Color OLED (160x128)
- SD/MMC card IF
- Headset Audio Codec (I2S)
- I2C I/O expander
- Touch sense buttons

COM-Satellite 3

- Ethernet RJ45
- MultiCAN
- RS485
- I2C I/O expander

ACT-Satellite 4

- Here: 3-phase motor control
- Full bridge power stage
- Resolver circuit
- Encoder interface
- Shunt current measurement

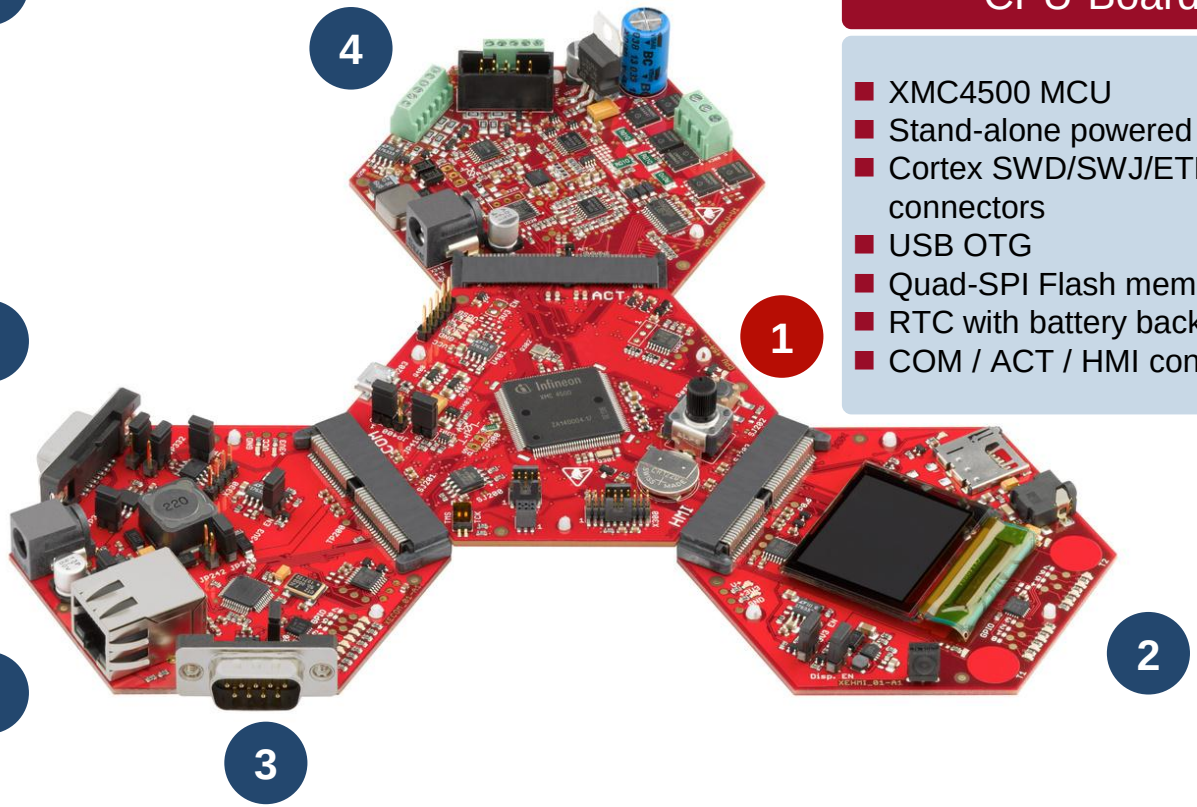

CPU-Board 1

- XMC4500 MCU
- Stand-alone powered via USB
- Cortex SWD/SWJ/ETM debug connectors
- USB OTG
- Quad-SPI Flash memory
- RTC with battery backup
- COM / ACT / HMI connector

	CPU Board	Debugger	Satellite Cards
Basic Edition	X		
Enterprise Edition	X	X	
Application Edition	X	X	X

Copyright © Infineon Technologies AG 2012. All rights reserved.

The XMC4500 Relax and Relax Lite Kit at a glance

XMC4500 Relax Lite Kit

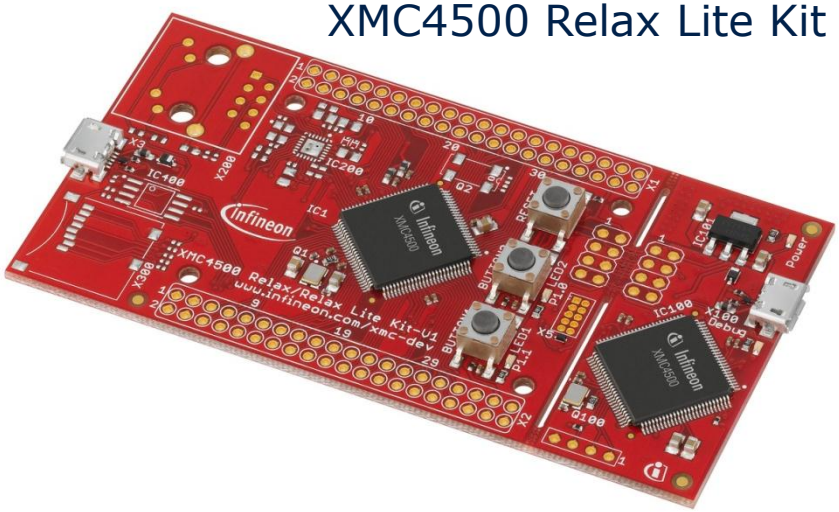

XMC4500 Relax Kit

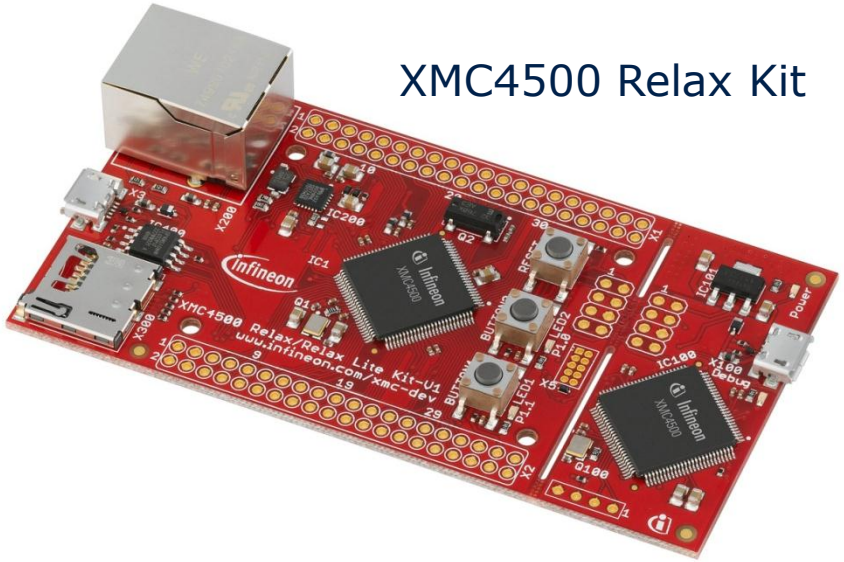

- Low budget evaluation boards based on XMC4500
  - ARM® Cortex™-M4F CPU running on 120MHz
  - 1MB Flash
  - 160KB RAM
- On-board debugger
- The **Relax *Lite* Kit** offers a complete set of on-board devices
  - USB plug and play
  - Buttons and LEDs for HMI
- The **Relax Kit** offers in addition
  - Ethernet-enabled communication option
  - microSD card for mass storage and file systems
  - Serial flash memory
- Both enable running of embedded RTOS and CMSIS compliant code development

Copyright © Infineon Technologies AG 2012. All rights reserved.

DAVE™ 3 free IDE and Code Generator open to 3rd parties

Integrated Development Environment (IDE)

- Eclipse based
- Free GNU Compiler, Debugger, Flash Loader
- Free data visualization utilities
- Open for 3rd party tools (Compiler, Debugger) and Software (Operating Systems, Stacks) as plug-in

Auto-code generator

- Easy selection of peripheral and application oriented DAVE™ Apps
- Configuration via graphical user interface
- Generated code can be used via well documented APIs (like a library)
- Extendable by user or 3rd party Apps

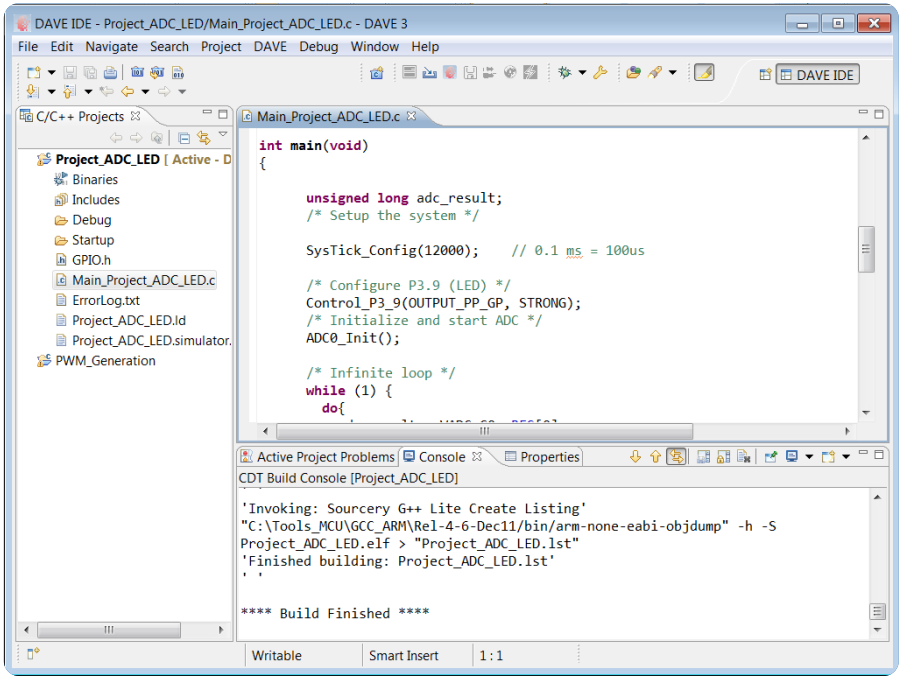

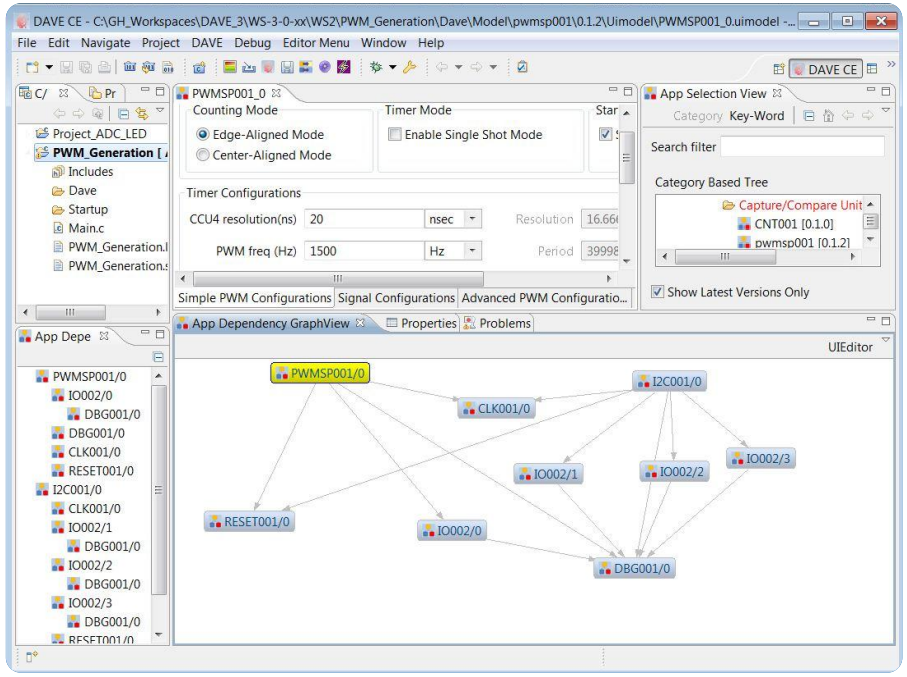

Copyright © Infineon Technologies AG 2012. All rights reserved.

DAVE™ 3 Applications

Service Apps

- DMA
- NVIC
- I/O
- EBU
- Flash
- CRC
- Debug Log
- CMSIS RTOS

Peripherals Specific Apps

Basic Applications

- Timer
- CAN
- USIC (I2S, I2C, UART, SPI)
- ADC
- ADC advanced
- Delta Sigma demodulator
- DAC
- Resolver
- PWM
- Capture
- Counter
- POSIF
- ETH
- Touch

Middle Ware

- USB stack, class drivers
- TCP/IP stack plus HTTP, FTP, SNMP
- SD/MMC, file system,…
- GUI lib plus driver for intel. LCD
- FOC motor control
- Touch / HMI
- Modbus
- …

Complete Solutions

- Webserver
- Motor Control
- HMI Demos

Copyright © Infineon Technologies AG 2012. All rights reserved.

XMC4000 Ecosystem



DAVE™ 3

- free integrated development environment
- free compiler, debugger, flash loader
- free automatic code generator
- extendable for 3rd parties
- operating system integration support

IDE, C-Compilers, Debuggers, Analysis Utilities	HW Debuggers	Flash Programming
Altium Atollic Keil IAR Systems Rowley Windriver	Hitex PLS iSystems Lauterbach Keil Segger	Hitex PLS Segger …

RTOS and middleware (TCP/IP/USB stacks, CAN, …)		Training and Consulting
CMX Express Logic FreeRTOS HighTec Keil	Micrium Segger Sevenstax Thesycon HCC embed	Hitex Microconsult

Copyright © Infineon Technologies AG 2012. All rights reserved.

XMC4000
One Microcontroller Platform – Countless Solutions

- XMC4000 is Infineon's family of microcontrollers based on ARM® Cortex™-M4, dedicated to industrial applications
- With XMC4000 our customers benefit from Infineon's vast know-how in microcontroller design, now coupled with all benefits of a standard CPU core
- Key benefits are: comprehensive peripheral set, high-integrity embedded Flash, extended temperature capabilities, long-term availability and high quality standards
- All enablers are in place to get the customers to start swiftly: Free SW infrastructure DAVE™ 3 including broad range of apps, set of development kits for their specific needs
- Further information
  - www.infineon.com/xmc4000
  - www.infineon.com/dave

Copyright © Infineon Technologies AG 2012. All rights reserved.

ENERGY EFFICIENCY
MOBILITY
SECURITY

Innovative semiconductor solutions for energy efficiency, mobility and security.



